SeaEra
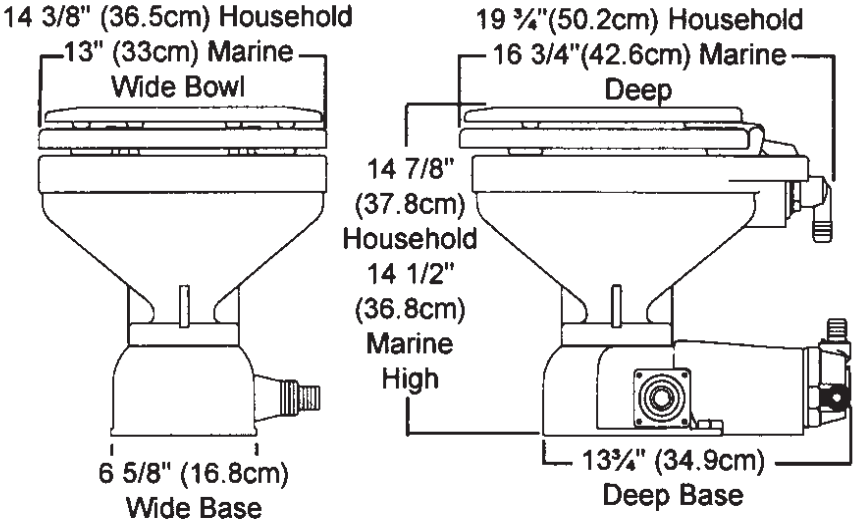
Sea Water Model (Integral)