ᛒ BLUETOOTH FLUSH CONTROL

Installation and Operation Instructions

Part STCBL

THE FOLLOWING ARE CAUTIONARY STATEMENTS THAT MUST BE READ AND FOLLOWED DURING BOTH INSTALLATION AND OPERATION.

WARNING: *Raritan Engineering Company, Inc. recommends that a qualified person or electrician install this product. Equipment damage, injury to personnel or death could result from improper installation. Raritan Engineering Company, Inc. accepts no responsibility or liability for damage to equipment, injury or death to personnel that may result from improper installation or operation of this product.*

WARNING: **HAZARD OF SHOCK OR FIRE**

Always use recommended fuse, circuit breaker and wire size.

DO NOT run continuously for more than 30 seconds.

Wireless Wall Panel

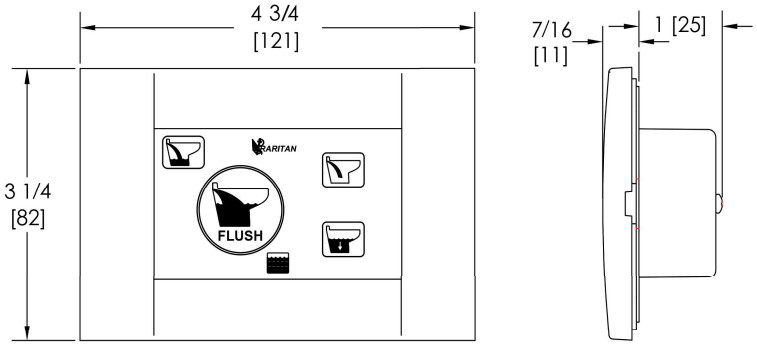

Control Box

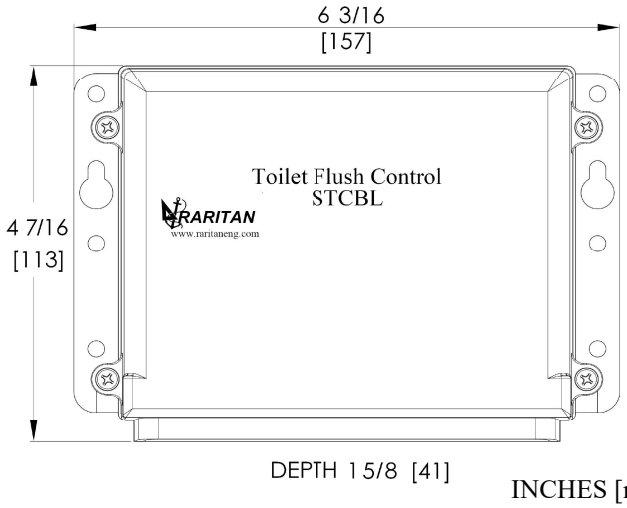

INCHES [mm]

Pairing is not required. The Wall Panel has been factory paired with the included Control Box.

NOTE!! Wall Panel becomes inoperable when Control Box is connected to the App. Wall Panel will automatically reconnect once App is disconnected.

Description:

Bluetooth Flush Control optimizes water use without compromising the quality of flush.

Flush Control consists of a Control Box and Wall Panel (batteries included).

NORMAL FLUSH	**Timed Flush**
WATER SAVER	**Timed Flush**
EMPTY ONLY	**Empties Toilet**
WATER ONLY	**Adds Water to Toilet**

Optional - Tank Full Sensor sold separately

HOLDING TANK FULL

Flush settings can be changed by downloading the Raritan App See "Changing Flush Settings" instructions on page 8.

Flush Control has a Holding Tank Full indicator. Optional Holding Tank Full Sensors are sold separately. Part # STCTSA and STCFL (see page 7).

Flush Control is reverse polarity protected. In case of reverse polarity, toilet will activate as soon as power is connected. After reverse polarity is corrected (within 10 minutes), unit will work as normal.

L381 1026 jlc

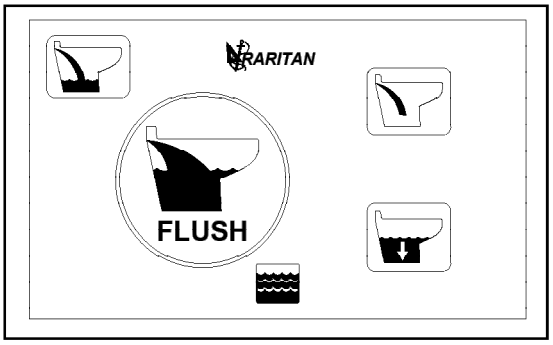

BLUETOOTH FLUSH CONTROL WALL PANEL

1. **NORMAL FLUSH**
   Press to start timed flush. There are three cycles of inlet and discharge. First cycle removes most of the waste. Second cycle removes remaining waste if any left after first cycle. Third cycle clears discharge housing and hose with clean water. Last fill is to retain water in the bowl for next use.

2. **WATER SAVER**
   Press to start timed water saver flush. This flush has only one cycle of inlet and discharge to clear liquid waste. Last fill is to retain water in the bowl for next use.

3. **EMPTY ONLY**
   Press to empty the bowl. Discharge pump runs as long as this button is held.

4. **WATER ONLY**
   Press to add water in the bowl. Inlet water solenoid/pump runs when button is pressed, with an eight second limit. After limit is reached, this button is disabled to prevent overflow of the bowl. To enable again, press EMPTY ONLY.

5. **HOLDING TANK FULL**
   (Optional - Tank Sensor sold separately)
   If optional tank sensor is installed, Holding Tank Full will indicate a full holding tank. Indicator will blink and beep for 5 seconds.

NOTE: NORMAL FLUSH/WATER SAVER FLUSH will not work with a full holding tank. EMPTY ONLY/ WATER ONLY will continue to work.

LOW WALL PANEL BATTERIES

Holding Tank Full Indicator will blink for 30 seconds when the Flush Control Panel's batteries need to be replaced. See page 3, FIG 2 for batteries location. 3 AAA batteries required.

Download the free Raritan App to change flush modes or timings. The App is used to test flush settings, diagnose problems, access device information and update firmware.
To change Flush Mode and Timing see "Change Flush Settings" section on page 8.

The Raritan Bluetooth Flush Control has two different flush modes:

Sequential Flush: In this mode, the toilet will add water and discharge waste separately. This fill/empty cycle will repeat once in WATER SAVER and three times during the NORMAL FLUSH cycle. At the end of this sequence cycle, a short pause will be followed by a final fill to leave water remaining in the bowl.

This mode is designed to provide the most efficient flush possible while using the least amount of water. It keeps the discharge pump flooded while providing powerful suction to remove waste from the bowl.

NOTE: All flush controls, are factory set to sequential mode.

Continuous Flush: In this mode, the toilet will add water to wet the bowl first and then follow with the inlet and discharge motors flushing together for the remainder of the cycle. At the end of this continuous cycle, a short pause will be followed by a final fill to leave water in the bowl.

IMPORTANT: This product uses Bluetooth® wireless communication. Metal objects located between the flush control panel and the base controller can weaken the radio signal and may cause intermittent operation. Ensure the installation area is free of metal obstructions whenever possible. Contact techsupport@raritaneng.com if additional guidance is needed.

FIG 1

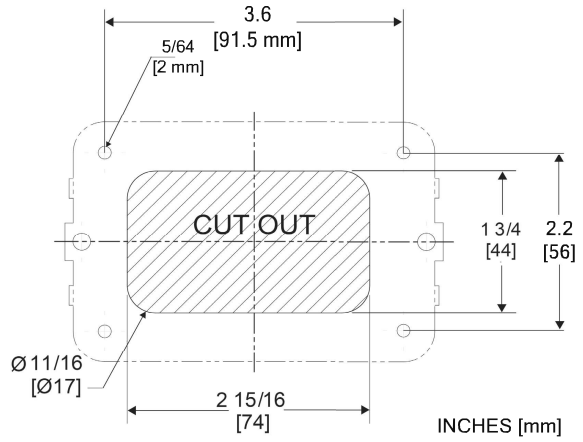

NOT TO SCALE

Installing the Wall Panel

1. Cut out cross-hatched area per FIG 1. Mark mounting holes using wall plate as guide.
2. Remove battery cover and install (3) AAA batteries (included). See FIG 2.
3. Mount Wall Panel using mounting screws.

FIG 2

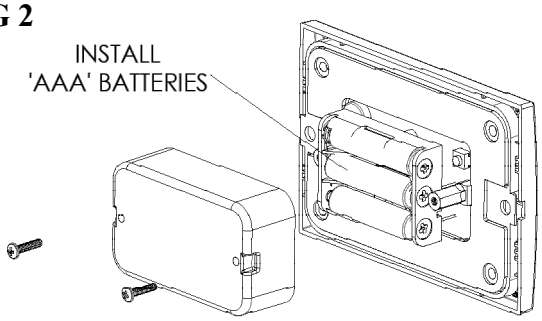

Installing the Control Box

1. Locate control box near toilet in a dry and accessible area.
2. Mount the Control Box to wall with wire opening at the bottom.
3. Open cover to access wiring connections.
4. Choose one of the wiring diagrams (FIG 4, 5, 6, 7 or 8) to route all wires.
5. Replace cover.

FIG 3

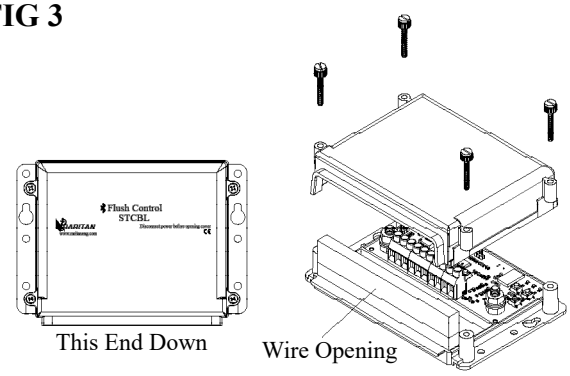

Recommended Wire and Fuse/Circuit Breaker Sizes

ATLANTES FREEDOM VORTEX VAC AND MARINE ELEGANCE

Table 1-Raw Water Model

(sizes based on both remote intake and discharge pumps amps added together)

Units Voltage	Circuit Breaker/ fuse size (amps)	Toilet Discharge Pump Amp draw	Remote Intake Pump Amp draw	10 feet	15 feet	20 feet	30 feet	40 feet	50 feet
12 VDC	30	18	10	10 AWG	8 AWG	6 AWG	4 AWG	4 AWG	2 AWG
24 VDC	20	10	5	16 AWG	14 AWG	12 AWG	10 AWG	10 AWG	8 AWG

Table 2- Pressurized Fresh Water Model

Units Voltage	Circuit Breaker/fuse size (amps)	Amp draw	10 feet	15 feet	20 feet	30 feet	40 feet	50 feet
12 VDC	25	18	10 AWG	10 AWG	8 AWG	6 AWG	6 AWG	4 AWG
24 VDC	15	10	16 AWG	16 AWG	14 AWG	12 AWG	10 AWG	10 AWG

SEAERA QC MODEL 162

Table 3- Raw Water Model

(sizes based on both remote intake and discharge pumps amps added together)

Units Voltage	Circuit Breaker/ fuse size (amps)	Toilet Discharge Pump Amp draw	Remote Intake Pump Amp draw	10 feet	15 feet	20 feet	30 feet	40 feet	50 feet
12 VDC	25	13	10	10 AWG	8 AWG	6 AWG	6 AWG	4 AWG	4 AWG
24 VDC	15	7.5	5	16 AWG	14 AWG	12 AWG	10 AWG	10 AWG	8 AWG

Table 4- Pressurized Fresh Water Model

Units Voltage	Circuit Breaker/fuse size (amps)	Amp draw	10 feet	15 feet	20 feet	30 feet	40 feet	50 feet
12 VDC	25	13	12 AWG	10 AWG	10 AWG	8 AWG	6 AWG	6 AWG
24 VDC	15	7.5	16 AWG	16 AWG	14 AWG	12 AWG	10 AWG	10 AWG

Table 5 - Remote Intake Pump Only (Raw Water and Sea/Fresh Models)

Units Voltage	Circuit Breaker/fuse size (amps)	Amp draw	10 feet	15 feet	20 feet	30 feet	40 feet	50 feet
12 VDC	15	10	14 AWG	12 AWG	10 AWG	10 AWG	8 AWG	6 AWG
24 VDC	10	5	16 AWG	16 AWG	16 AWG	16 AWG	14 AWG	12 AWG

NOTES: for Wiring

1. Distances are from source to control box and back to source.
2. Distance from power source to remote intake pump MUST be included when determining total distance.
3. Recommended conductor wire minimum AWG [mm²] for 3% voltage drop.
4. Recommended conductor sizes are based on 105°C rated insulation. Single conductor (not bundled), refer to ABYC Standards for sizes with other insulation ratings.
5. For installations using 120/240 VAC units, use 12 VDC specifications from transformer to control unit. See transformer instructions for further wiring details.

WIRING

WARNING: Hazard of Shock and Fire

- **Make sure power is off before proceeding.**
- **Always use proper wire, wire connectors and fuse/circuit breaker. See Specification Chart.**
- **Secure wire properly.**
- **Do not connect appliances to toilet circuit.**

1. Determine proper wire size by measuring distance from:
   - Power source to Control Box and back to power source.
   - Remote pump units: Determine proper wire size for remote pump from wiring diagram on page 4 (FIG 5 and FIG 6, see Table 5).
2. Select proper wire and fuse/circuit breaker size from Specifications on Table 1.
3. Install fuse/circuit breaker in positive line at source.
4. Wire control box to the toilet and battery using one of the following wiring diagrams.

CONVERSIONS

Wire - AWG to mm

AWG	16	14	12	10	8	6	4	2
mm	1.5	2.5	4.0	6.0	10.0	16.0	25.0	35.0

Feet to Meters

Feet	10	15	20	25	30	40	50
Meter	3.1	4.6	6.1	7.6	9.2	12.2	15.2

MARINE SANITATION DEVICE (MSD) OPERATION

- To start Electroscan, PurasanEX (PSTEX) or PurasanEX2 (PSTEX2) from Bluetooth Smart Toilet Control (STCBL), wire per FIG 7.
- To start/flush toilet by activating the Electroscan, PurasanEX (PSTEX) or PurasanEX2 (PSTEX2), wire per FIG 8.

For Lectra/San MC, EC or Purasan call Raritan Customer Service

FIG 4

WIRING FOR FLUSH CONTROL PRESSURIZED FRESHWATER MODELS

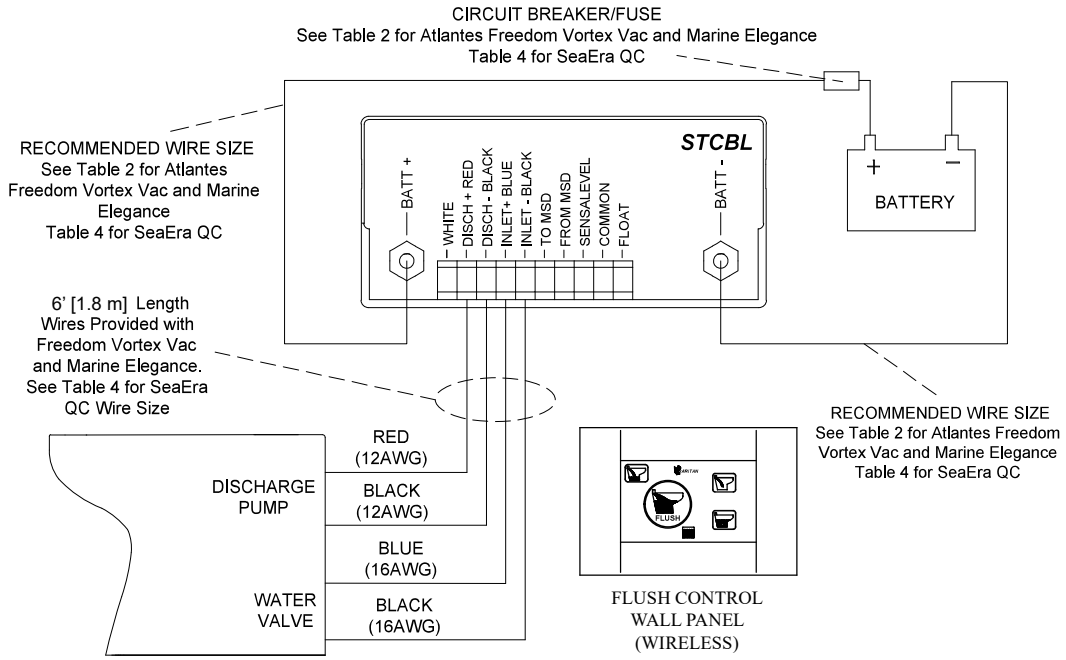

FIG 5

WIRING FOR FLUSH CONTROL, REMOTE PUMP MODELS

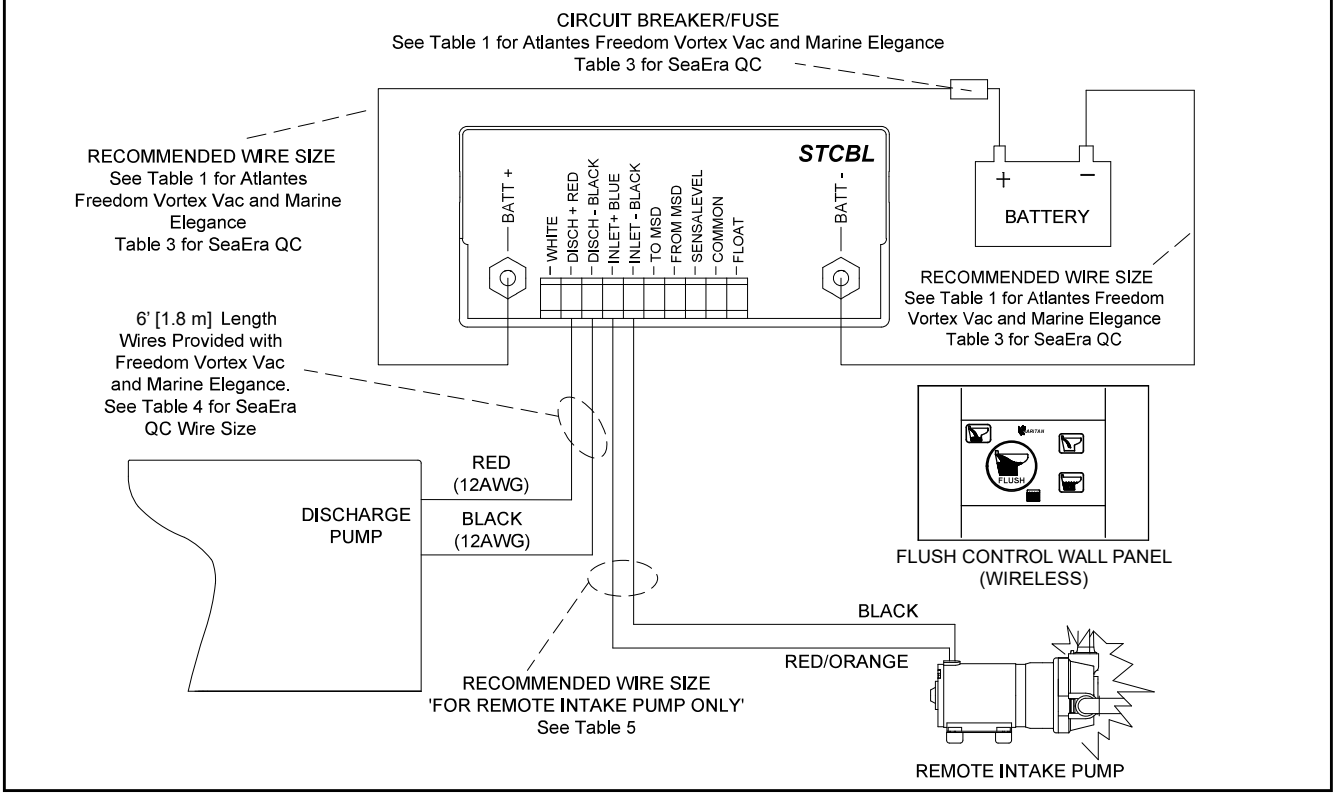

FIG 6

WIRING FOR FLUSH CONTROL, SEA FRESH MODELS

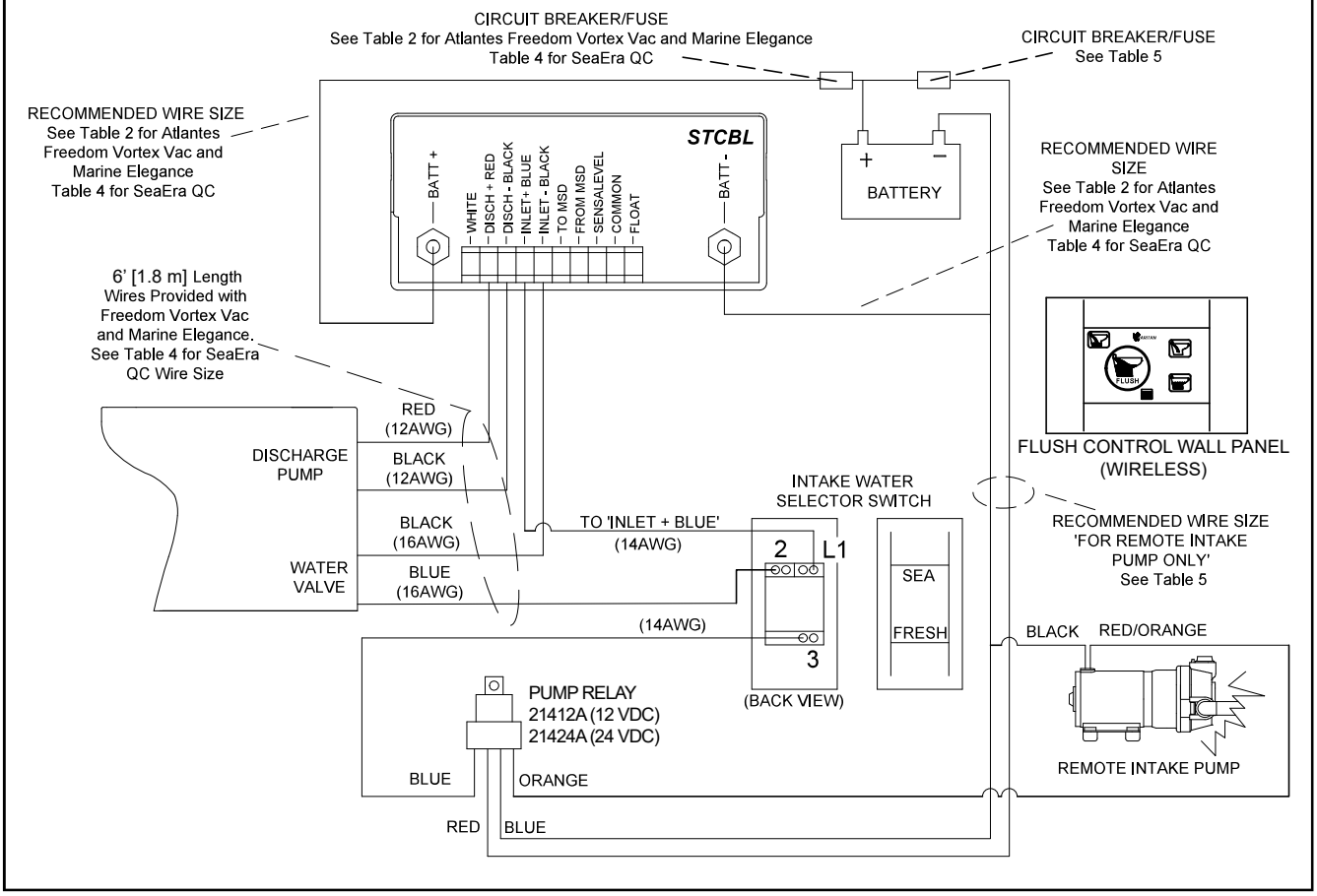

FIG 7

WIRING FOR FLUSH CONTROL WHERE TOILET ACTIVATES MSD

PSTEX / PSTEX2

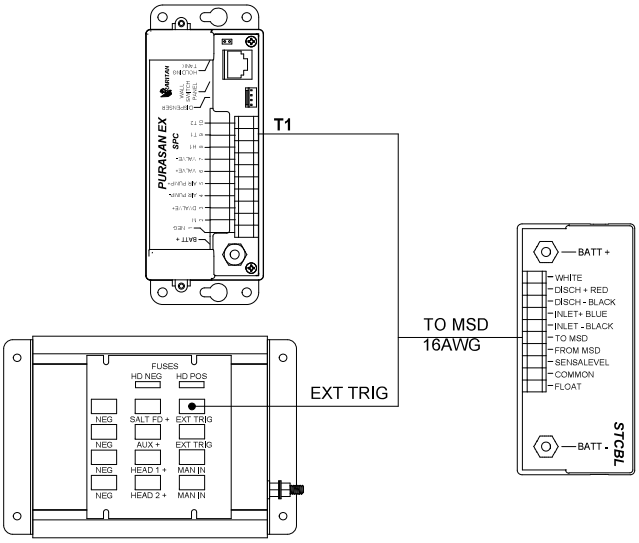

ELECTROSCAN

FIG 8

WIRING FOR FLUSH CONTROL WHERE MSD ACTIVATES TOILET

PSTEX / PSTEX2

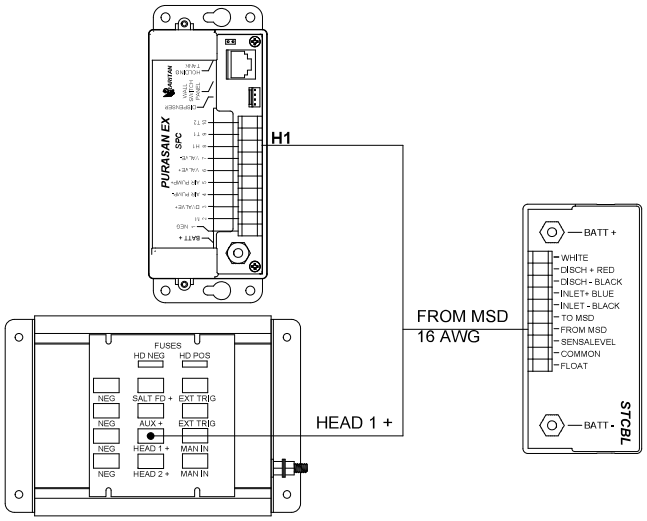

ELECTROSCAN

OPTIONAL HOLDING TANK INDICATORS AVAILABLE

FIG 9

RARITAN PART# STCTSA

HOLDING TANK FULL INDICATOR

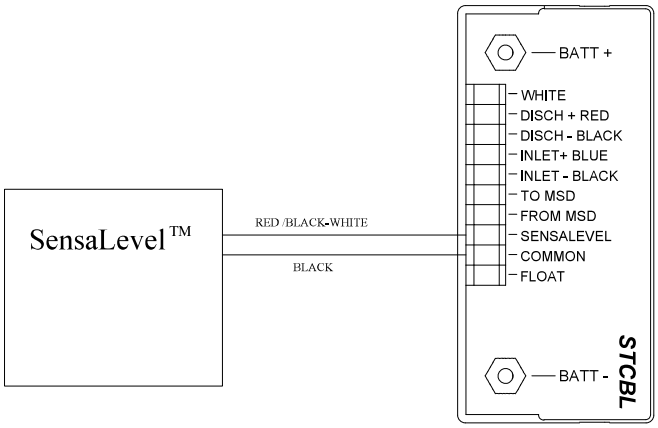

FIG 10

RARITAN PART# STCFL

HOLDING TANK FULL INDICATOR

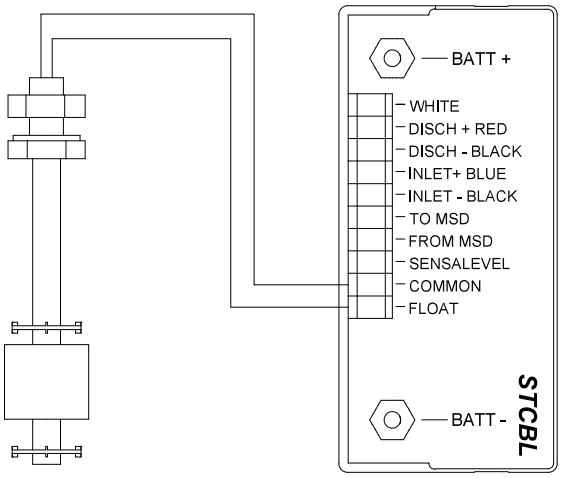

Factory timing settings will work for most installations.
To make changes to timing, follow guidelines below to optimize flushing after installation.

Observation / Issue	Action
Water does not empty all the way in the first cycle	Increase discharge timing (Flush Empty Time 1 or 2)
Water empties, but discharge pump runs more than a second after all water is gone in first cycle	Decrease discharge time (Flush Empty Time 1 and 2)
Solids and toilet paper remain in the bowl after first cycle	Increase (Pre Flush Time)
Water level too high after initial fill cycle	Reduce water retention time (T3)
There is little or no water left in the bowl	Increase water retention time
Water siphons out after 10 or 15 minutes from the bowl	Enable longer pause before retention fill

CHANGING FLUSH SETTINGS

Flush settings are factory set to provide optimal flushing for most installations. Some installations may require adjustments to the settings.

Only one control interface (phone app or wall panel) is active at a time. The app is used for changing flush settings or troubleshooting.

TO PAIR APP WITH FLUSH CONTROL

The Wall Panel has been factory paired with the included Control Box.

NOTE: Wall Panel becomes inoperable when Control Box is connected to the App. Wall Panel will automatically reconnect once App is disconnected.

1. Download the Raritan App
   (Available for iOS and Android phones)

Apple / iOS App Icon

Android App Icon

FIG 11

2. Remove cover from the Flush Control Box.

FIG 12

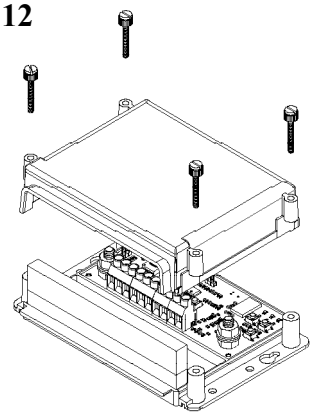

3. Turn power on to Flush Control.
4. Open the Raritan App, press OK.

FIG 13

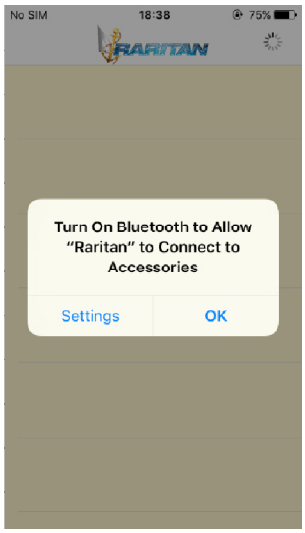

5. On Flush Control Box, press and hold Pairing Switch (SW1) for 3 seconds then release. After 3 seconds, Diagnostic Status (LED3) will flash one time quickly. The pairing (LED1) and the BLE Status (LED2) will flash together 1 flash per second.

FIG 14

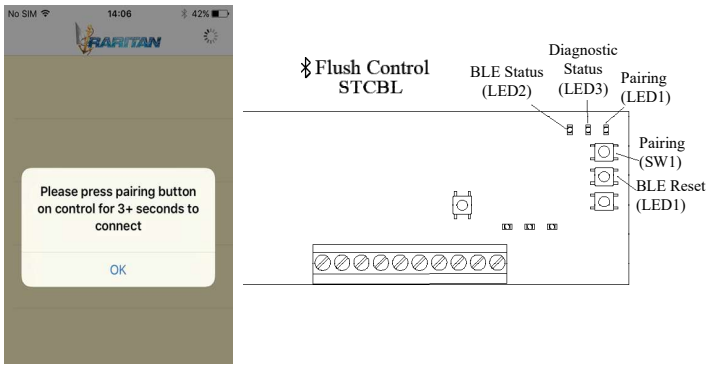

6. On App, press 'Connect'.

FIG 15

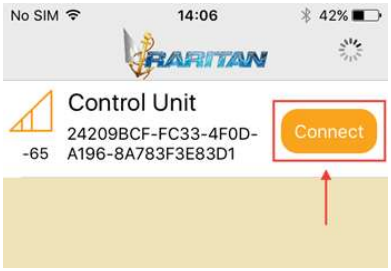

7. Press 'Setting'. This screen allows users to select Continuous or Sequential Flush cycles. Pressing ⓘ will provide further detail to each function. It can also be used to restore to factory settings.

FIG 16

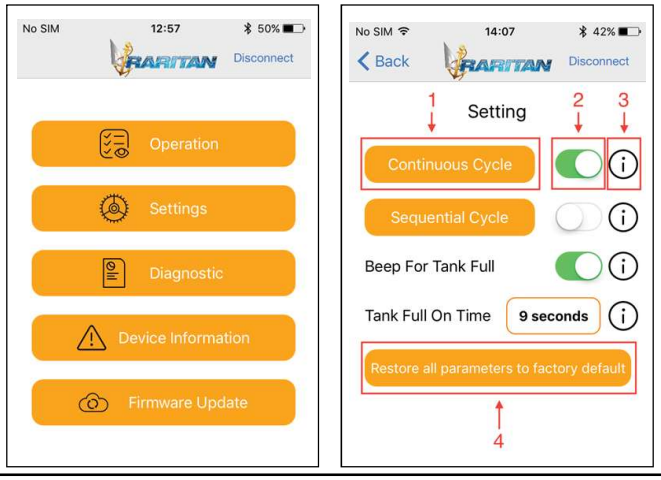

8. Pressing Continuous or Sequential Cycle allows for detailed timing adjustments.

FIG 17

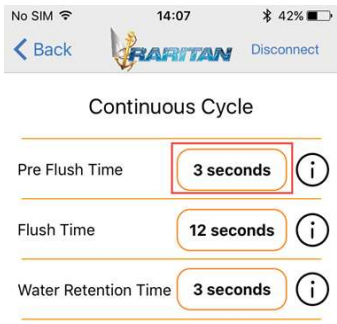

9. Press the back button and select Operation.

FIG 18

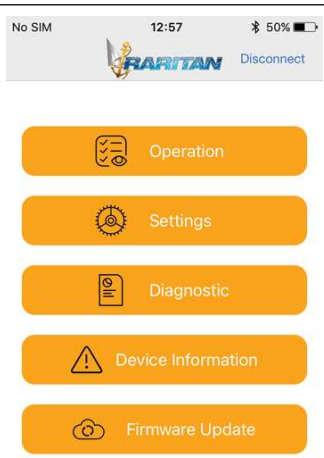

10. Test new settings by pressing symbols below.

FIG 19

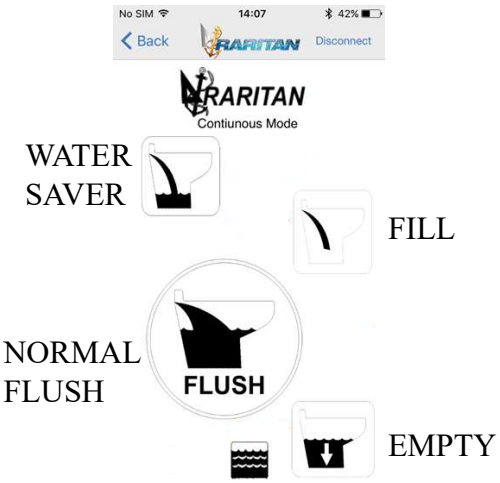

11. Select Disconnect for wireless wall panel to reconnect.

OPERATING DIAGNOSTICS SCREEN

Diagnostics Screen can help determine the cause of a problem. It evaluates pump performance.

The Diagnostic button is located on the main screen. (See below)

FIG 20

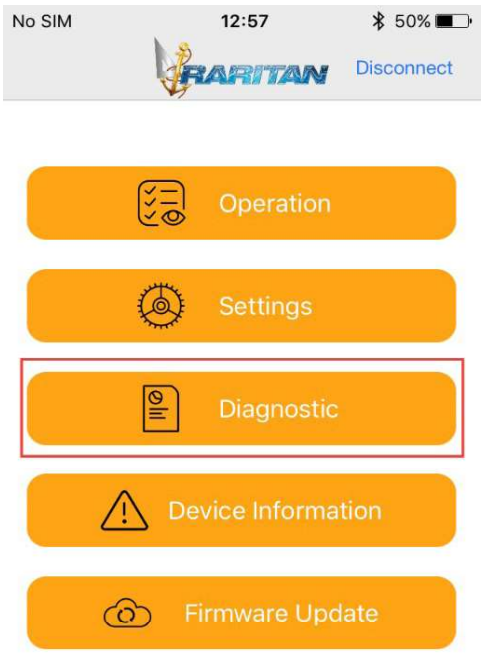

The Diagnostics will record up to 250 consecutive cycles.

Data recorded:
Inlet Amps
Discharge Amps
Inlet Motor ON/OFF
Discharge Motor ON/OFF
"TO MSD" ON/OFF
Holding Tank Empty/Full.

Use < > to scroll through the records.

FIG 21

PAIRING REPLACEMENT PANEL OR CONTROL BOX

REPLACING WALL PANEL OR CONTROL BOX

When adding a new Wall Panel with an existing Control Box (or a new Control Box with existing Wall Panel), the units ***must*** be paired together.

CLEARING PREVIOUS PAIRINGS

IMPORTANT: Power to Control Box MUST BE ON and batteries installed in wall panel.

1. On Flush Control Box, press and hold Pairing Switch (SW1) for 15 seconds then release.

NOTE: Anything less than 10 seconds will not pair.

All LEDs (1, 2 & 3) should be OFF.

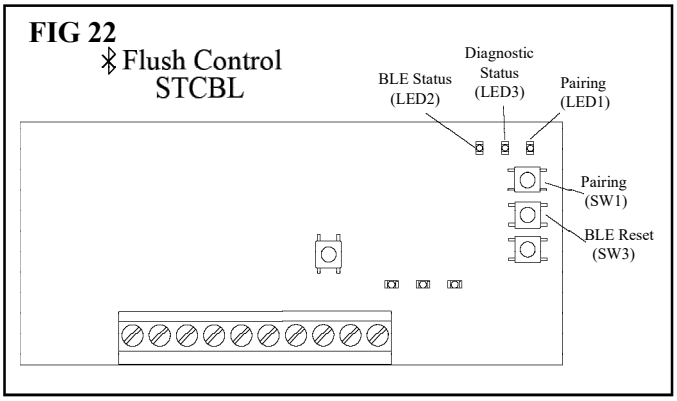

2. On Wall Panel, press and hold Pairing Switch SW5 for at least 7 seconds. All LEDs on the Control Box (1, 2 & 3) will still be off.

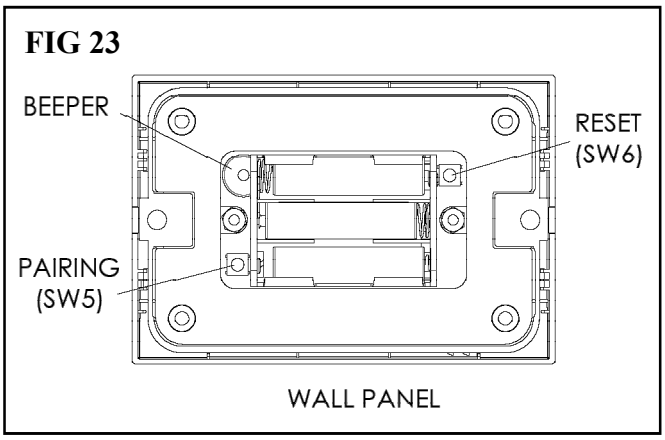

3. In Control Box, press SW1 for 1 second and release.
4. On Wall Panel, press SW5 for 1 second and release.
5. In Control Box, LED2 will be on for several seconds then LEDs1 and 2 will begin to flash together 1 blink / 2 seconds.
6. The Panel and Control are now paired.

NOTE: If Diagnostic Status (LED3) remains blinking (1 blink/sec), press BLE Reset (SW3) to turn off LED3.

TESTING CONTROL

The Control can be tested independently (as well as connected to toilet). Press FROM MSD switch, Inlet and Discharge LEDs flash on and off indicating their respective pumps. TO MSD LED light will flash on for one second at beginning of flush cycle. Flush cycle will either be sequential or continuous depending on the setting. Factory setting is sequential.

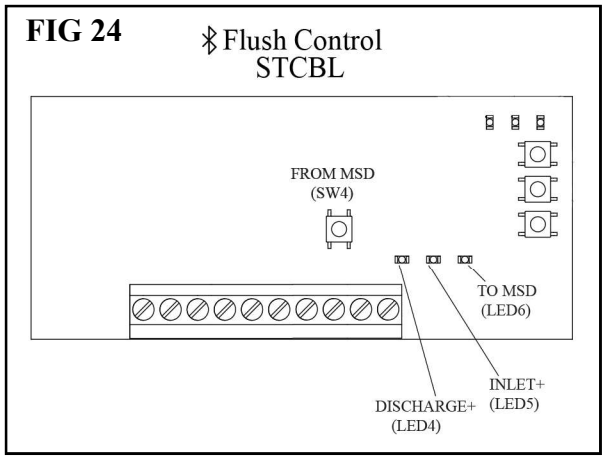

TESTING HOLDING TANK FULL CIRCUIT ON CONTROL

Press Holding Tank Full switch (SW2) Diagnostic LED must go on.

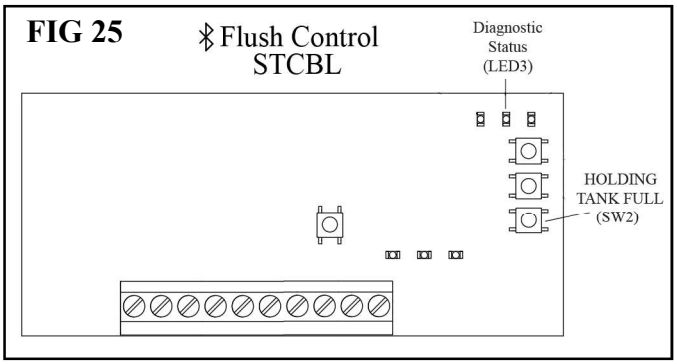

DIAGNOSTIC (SMARTPHONE) TROUBLE SHOOTING

(SEE FIG 21)

Problem	Inlet Amps	Discharge Amps	Inlet On/ Off	Discharge On/Off	To MSD On/Off	Holding Tank Full/Empty	Corrective Action
No inlet water	0.3 (or less)	>2	ON	ON	N/A	N/A	Open circuit to inlet. Check wiring or inlet pump/valve. Correct wiring or replace defective pump/valve.
No inlet water	0.3 (or less)	>2	OFF	ON	N/A	N/A	Short in wiring, pump/valve or defective control. Disconnect wiring for pump/valve from control. Run water saver flush and check cycle results. If inlet On/Off is still off; Defective control. Replace control. If inlet On/Off is on; Defective wiring or pump/valve. Correct wiring or replace pump/ valve.
No discharge	>.05	0.3 (or less)	ON	ON	N/A	N/A	Open circuit to discharge pump. Check wiring or discharge pump. Correct wiring or replace defective pump.
No discharge	>.05	0.3 (or less)	ON	OFF	N/A	N/A	Short in wiring, discharge pump or defective control. Disconnect wiring for discharge pump from control. Run water saver flush and check cycle results. If discharge On/Off is still off; Defective control. Replace Control. If discharge On/Off is on; Defective wiring or discharge pump. Correct wiring or replace discharge pump.
MSD does not activate	N/A	N/A	N/A	N/A	ON	N/A	Open circuit to MSD. Check wiring or MSD. Correct wiring or repair MSD.
MSD does not activate	N/A	N/A	N/A	N/A	OFF	N/A	Short in wiring, defective MSD or defective control. Disconnect wiring to MSD from control. Run water saver flush and check cycle results. If to MSD On/Off is still off; Defective control. Replace control. If to MSD On/Off is on; Defective wiring or MSD control. Correct wiring or replace MSD control.
Holding tank full indication, Tank Empty	N/A	N/A	N/A	N/A	N/A	FULL	Disconnect Level Sensor from control. Go to Operation and Flush Toilet (Flush or Water Saver). Toilet flushes; Defective Level Sensor or wiring. Toilet does not flush; Defective control. Replace control.
Holding tank empty indication, Tank Full	N/A	N/A	N/A	N/A	N/A	EMPTY	On control, press Holding Tank Full Switch (SW2). Diagnostic LED goes on; Defective level sensor. Check wiring or replace level sensor. Diagnostic LED does not go on; Defective control. Replace control.

FOR LIMITED WARRANTY TERMS AND CONDITION PLEASE REFER TO TOILET MANUAL

RARITAN
The Most Dependable Name on the Water

530 Orange Street, Millville, NJ 08332 USA
Telephone: 856-825-4900 FAX: 856-825-4409
www.raritaneng.com